8" lavatory faucet

ED08L

Specifications

Descriptions

- Ceramic cartridge
- Push drain
- 3/8" speedway compression

Available colors

- C : Chrome
- BN : Brushed Nickel (PVD)
- PN : Polished Nickel (PVD)

Available flows

- 5.7 L/min, 1.5 gpm (US) 60psi *****
- 1.9 L/min, 0.5 gpm (US) 60psi (**ED08L-05**)
- 3.7 L/min, 1 gpm (US) 60psi (**ED08L-10**)

EPA certification applicable to the indicated model only

Certifications

- CSA B125.1
- NSF/ANSI standard 61 and 372
- ASME A112.18.1
- CMR248 Approval
- ADA

* WaterSense Meets EPA Criteria Certified by IAPMO R&T cUPC® ADA

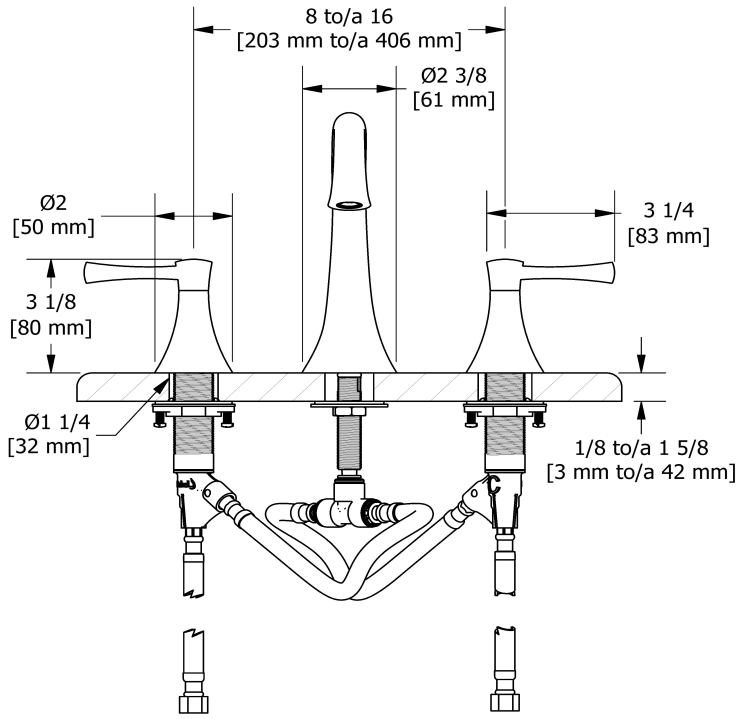

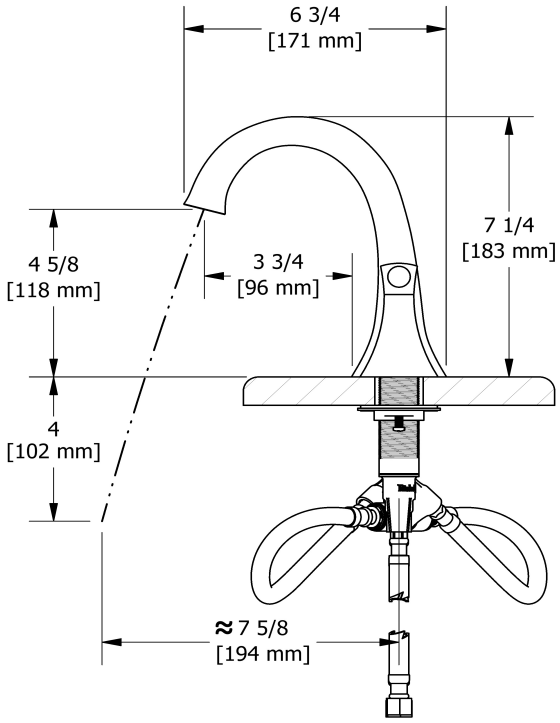

Sizes, models and finishes may differ from thoses presented.

Warranty

This Riobel Inc. product you have purchased carries a Limited Lifetime Warranty on the chrome, PVD finish, blacks and all working parts and is guaranteed from the initial purchase date against all manufacturing defects. All other finishes, including plastic components, are guaranteed for one year. All electric and/or electronic parts are covered by a 5-year limited warranty. The warranty offered on our products will be honored only if the installation is performed by a certified master plumber.

Customer Care

Phone (800) 777 - 9762 | Email: customercare@houseofrohl.com | Website: houseofrohl.com/support/contact-us

Consult your local House of Rohl showroom for additional information and specifications. For complete warranty details and a list of showrooms, go to houseofrohl.com